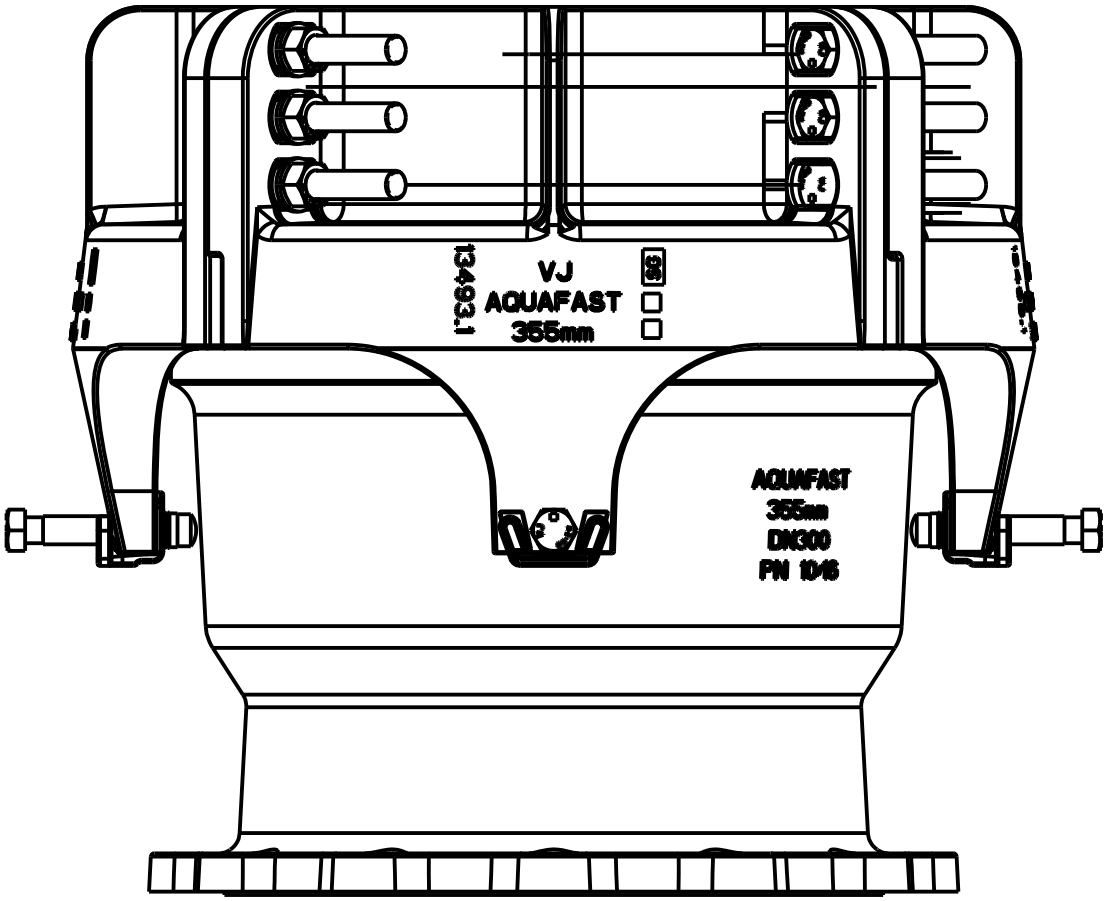
134931
VJ
AQUAFAST
355mm
AQUAFAST
355mm
DN300
PN 10/16